RAM S990 AWNING

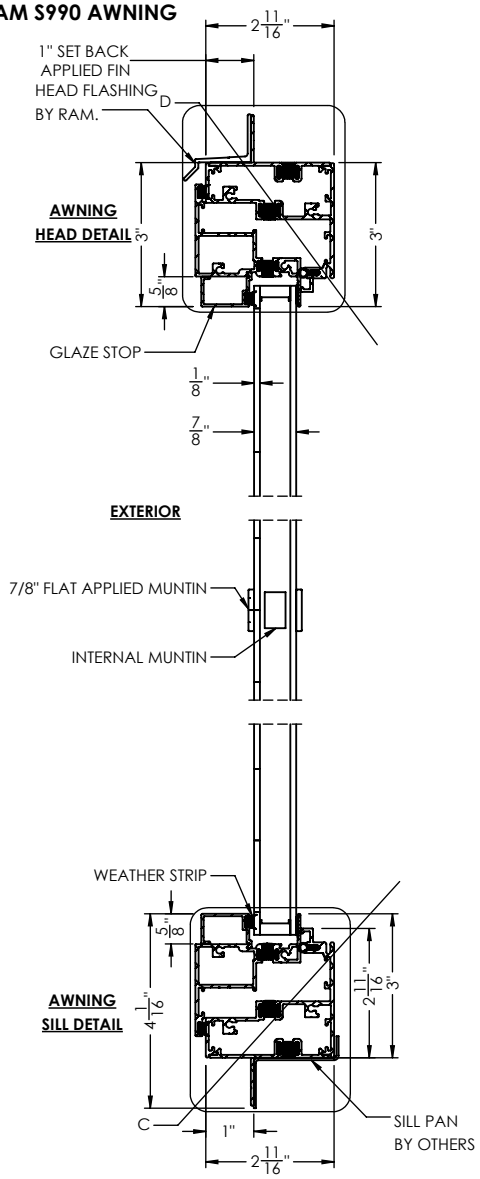

SECTION A-A
SCALE 1 : 4

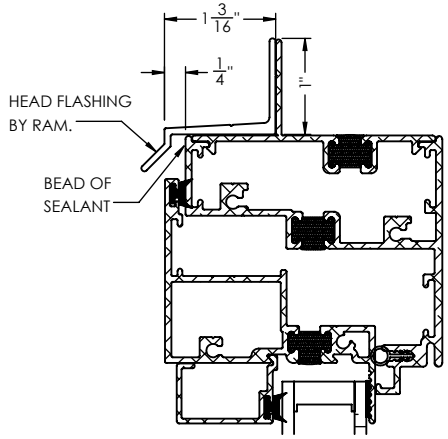

DETAIL D
SCALE 1 : 2

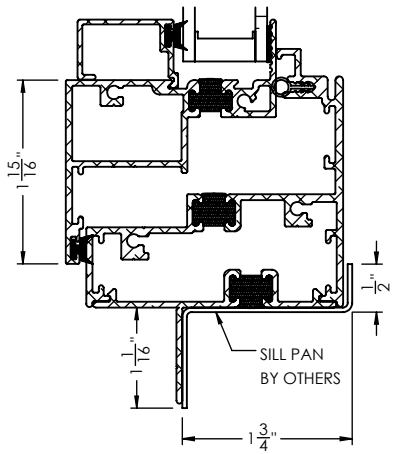

DETAIL C
SCALE 1 : 2

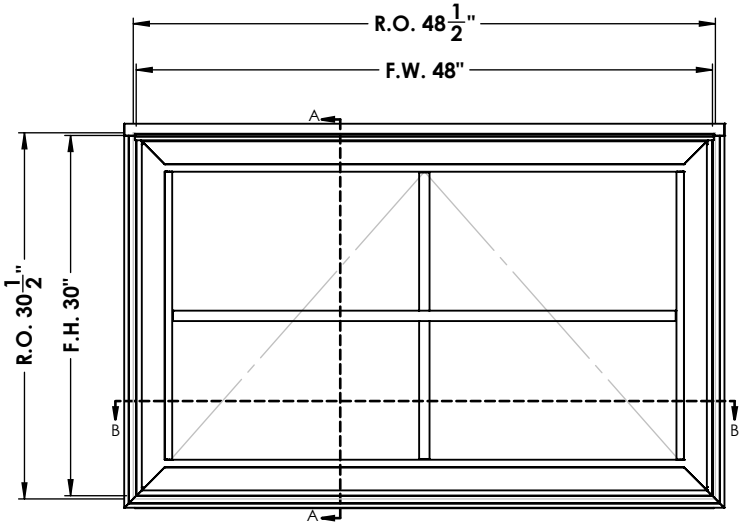

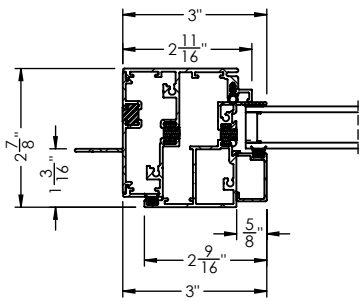

AWNING
LEFT JAMB DETAIL

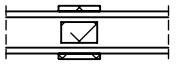

EXTERIOR

SECTION B-B
SCALE 1 : 4

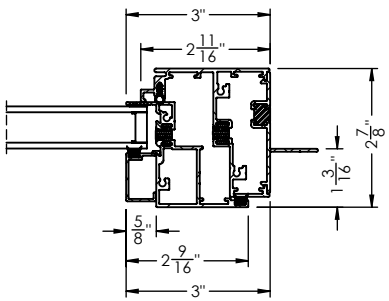

AWNING
RIGHT JAMB DETAIL

REVISIONS				
ZONE	REV	DESCRIPTION	DATE	APPROVED

DRAWING APPROVAL

- ☐ APPROVED
- ☐ APPROVED AS NOTED
- ☐ REVISE AND RESUBMIT

SIGN _____ DATE _____

Please return one print set marked with your signature, any comments, and notation of approval for fabrication.

PROPRIETARY AND CONFIDENTIAL

THE INFORMATION CONTAINED IN THIS DRAWING IS THE SOLE PROPERTY OF RAM WINDOWS & DOORS. ANY REPRODUCTION IN PART OR AS A WHOLE WITHOUT THE WRITTEN PERMISSION OF RAM WINDOWS & DOORS IS PROHIBITED.

RAM WINDOWS & DOORS

LEAD TIME		CUSTOMER	RAM S990
GLASS WARRANTY		PROJECT	AWNING
FRAME WARRANTY		CITY	
FINISH WARRANTY		STATE	
U-FACTOR		OUTER GLASS	
SHGC		AIR SPACE	
OA GLASS THICKNESS	7/8"	INNER GLASS	

UNLESS OTHERWISE SPECIFIED: DIMENSIONS ARE IN INCHES TOLERANCES:

FRACTIONAL: ± 1/16
ANGULAR: MACH/BEND: ± 1
TWO PLACE DECIMAL ± 0.01
THREE PLACE DECIMAL ± 0.005

MATERIAL:

DO NOT SCALE DRAWING

	NAME	DATE
DRAWN	CG	10/7/2026
ENG		
MARK		
QTY.		
FINISH		
DP		
SCALE: 1:16		

RAM WINDOWS AND DOORS

TITLE: RAM S990 AWNING

SIZE	WTS NUMBER	REV
A	S990 AWN-SDL-Assembly	
	WEIGHT: 57.752	SHEET 1 OF 1